Fakultet tehničkih nauka, DRA, Novi Sad
Predmet:

Baze podataka 2

Prevođenje

Dr Milan Čeliković

Marko Vještica

Aleksandar Jeremić

Miroslav Tomić

Aleksandar Hadžibabić

Gergelj Kiš

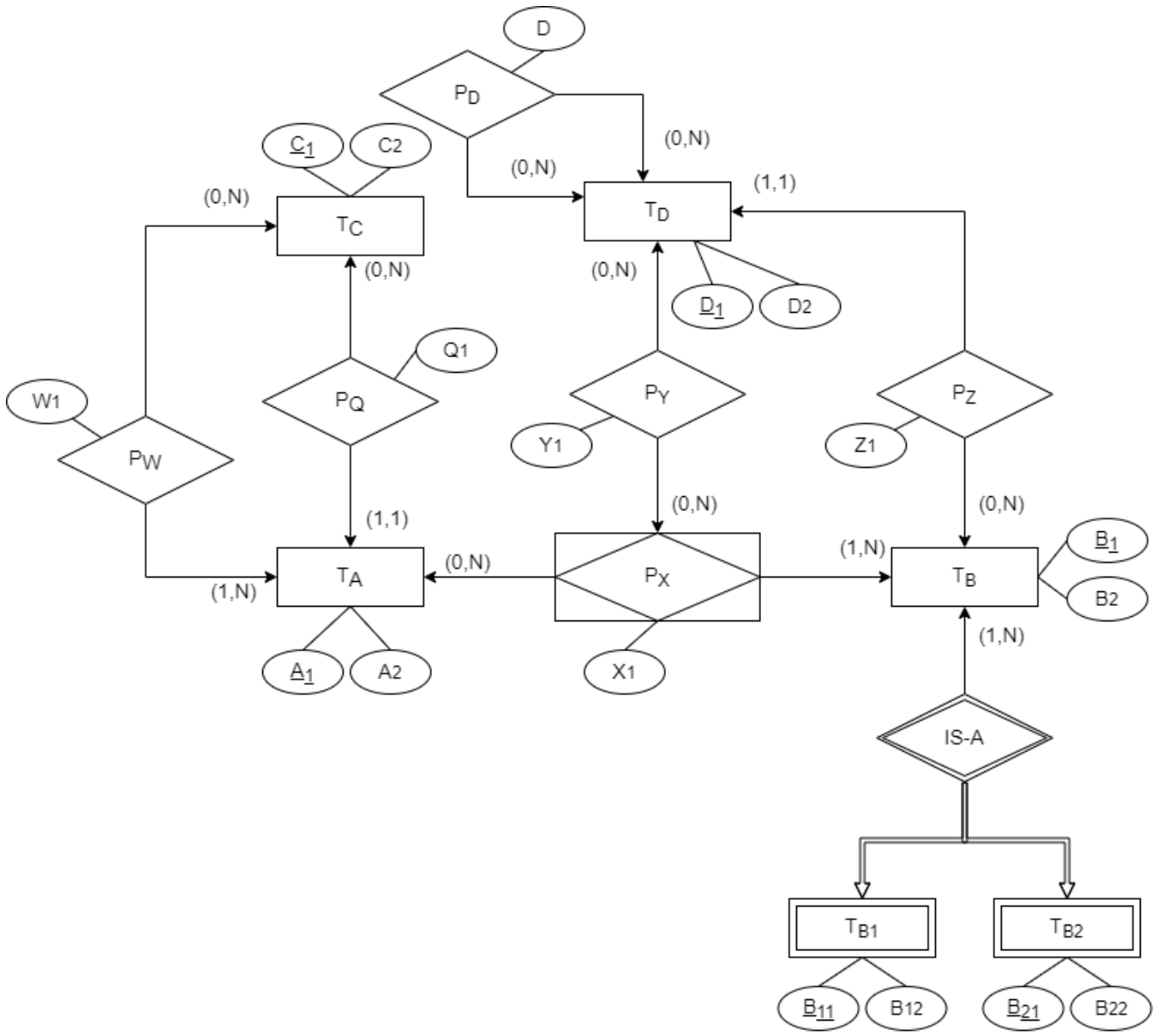
D
PD
(0,N)
(0,N)
C1
C2
(0,N)
TC
TD
(1,1)
(0,N)
(0,N)
D1
D2
Q1
W1
PQ
PY
PZ
PW
Y1
Z1
(1,1)
(0,N)
(0,N)
(1,N)
TA
(0,N)
PX
TB
B1
B2
(1,N)
A1
A2
X1
(1,N)
IS-A
TB1
TB2
B11
B12
B21
B22

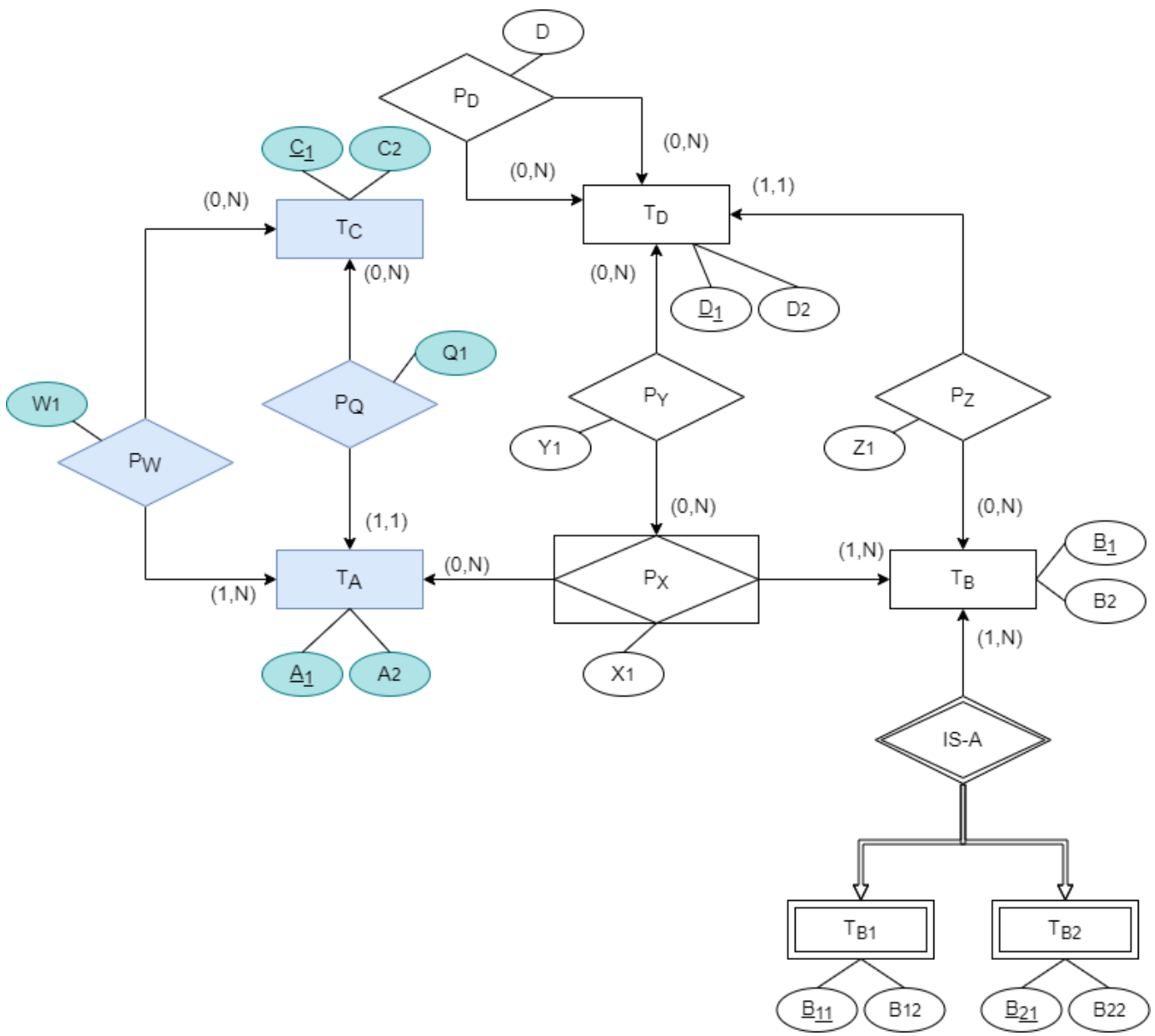

$$T_C(\{C_1, C_2\}, \{C_1\})$$

$$T_A(\{A_1, A_2, C_{11}, Q_1\}, \{A_1\})$$

$$\mathrm{dom}(C_{11}) \subseteq \mathrm{dom}(C_1)$$

$$T_A[C_{11}] \subseteq T_C[C_1]$$

$$\mathrm{Null}(T_A, C_{11}) = \perp$$

$$P_W(\{A_1, C_1, W_1\}, \{A_1 + C_1\})$$

$$P_W[A_1] \subseteq T_A[A_1]$$

$$T_A[A_1] \subseteq P_W[A_1]$$

$$P_W[C_1] \subseteq T_C[C_1]$$

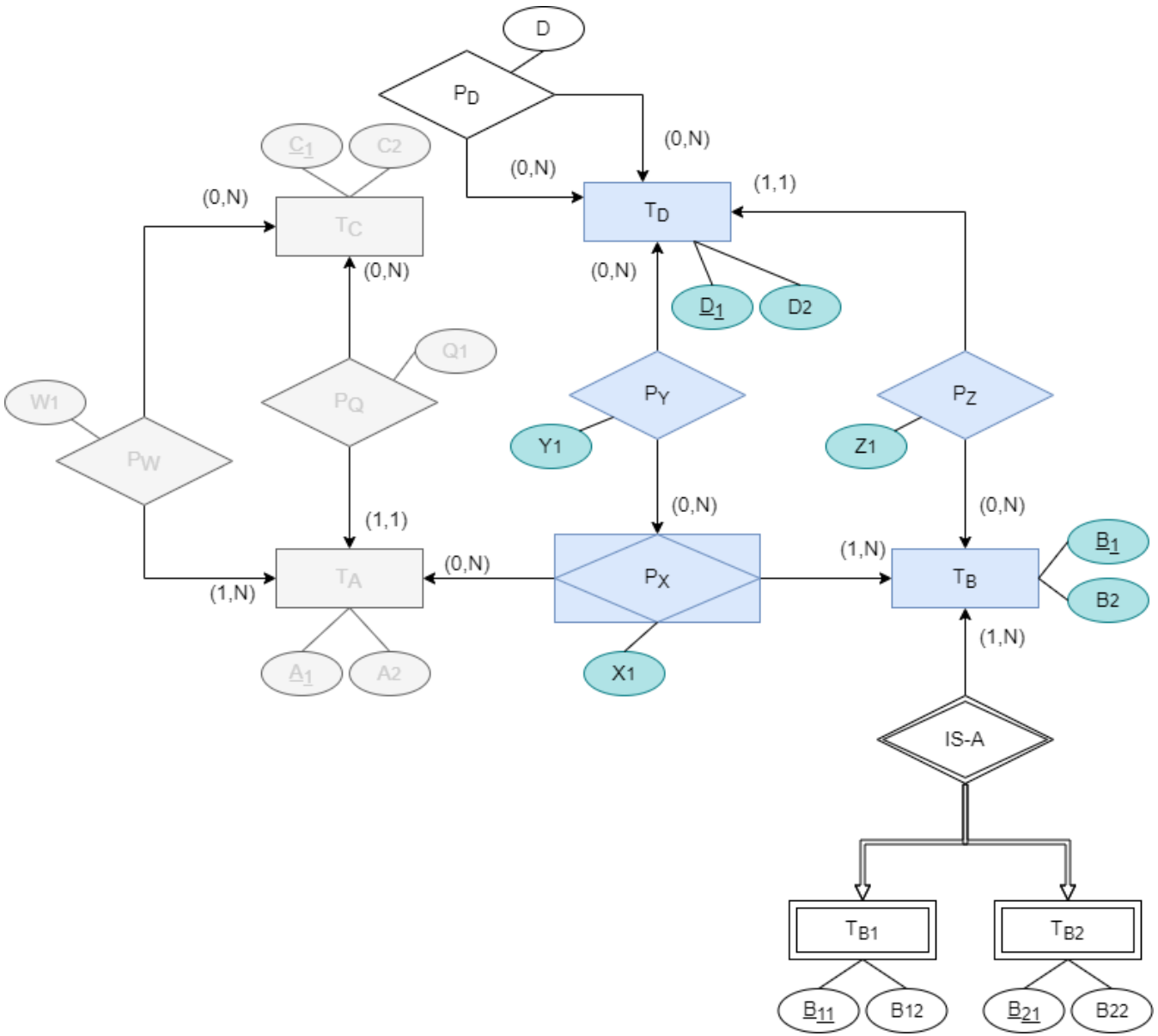

$$T_B(\{B_1, B_2\}, \{B_1\})$$

$$P_X(\{A_1, B_1, X_1\}, \{A_1 + B_1\})$$

$$P_X[A_1] \subseteq T_A[A_1]$$

$$P_X[B_1] \subseteq T_B[B_1]$$

$$T_B[B_1] \subseteq P_X[B_1]$$

$$T_D(\{D_1, D_2, B_1, Z_1\}, \{D_1\})$$

$$T_D[B_1] \subseteq T_B[B_1]$$

$$\mathrm{Null}(T_D, B_1) = \perp$$

$$P_Y(\{D_1, A_1, B_1, Y_1\}, \{D_1 + A_1 + B_1\})$$

$$P_Y[D_1] \subseteq T_D[D_1]$$

$$P_Y[A_1 + B_1] \subseteq P_X[A_1 + B_1]$$

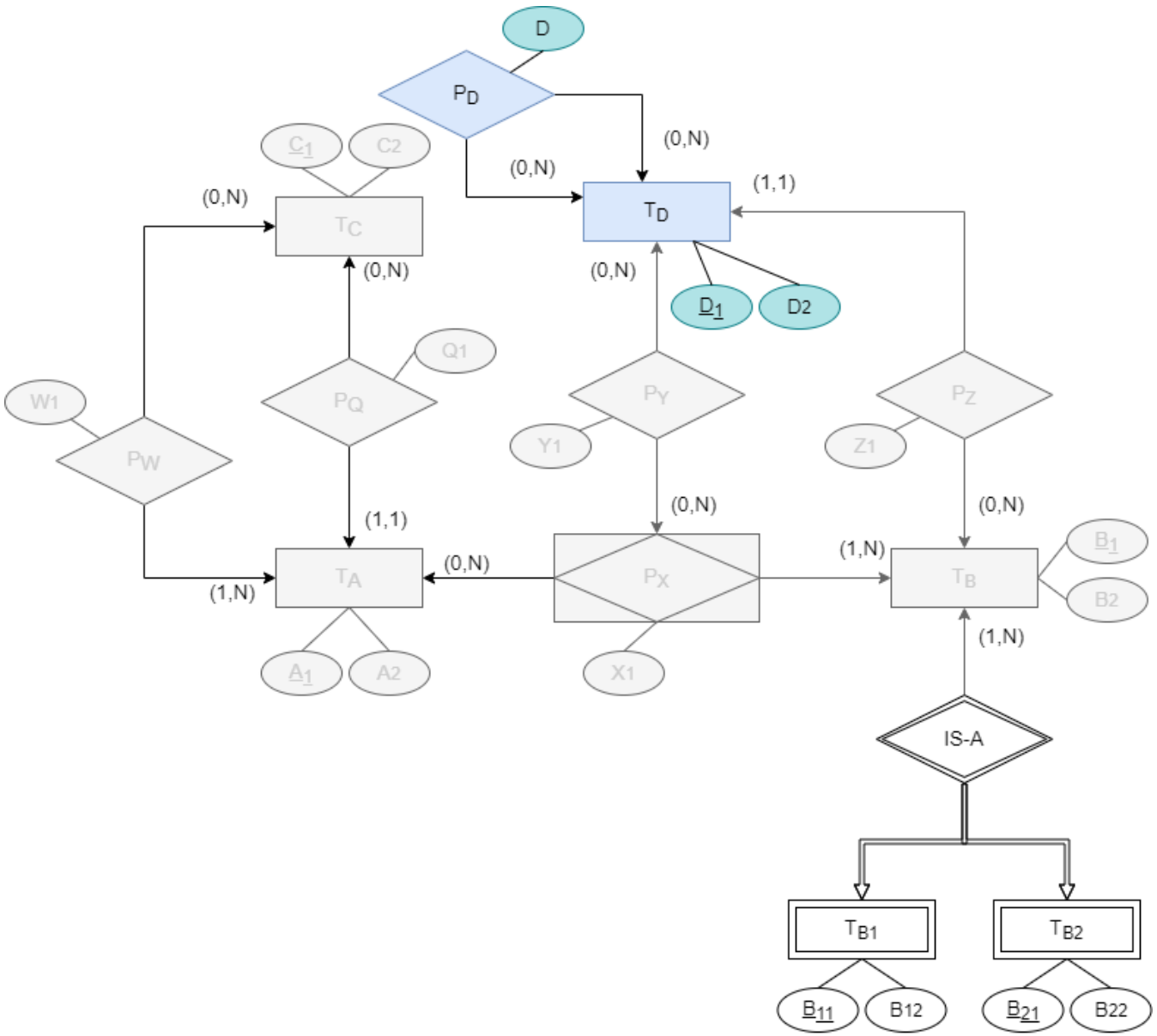

$$P_D(\{D_1, D_{11}, D\}, \{D_1 + D_{11}\})$$

$$\mathrm{dom}(D_{11}) \subseteq \mathrm{dom}(D_1)$$

$$P_D[D_1] \subseteq T_D[D_1]$$

$$P_D[D_{11}] \subseteq T_D[D_1]$$

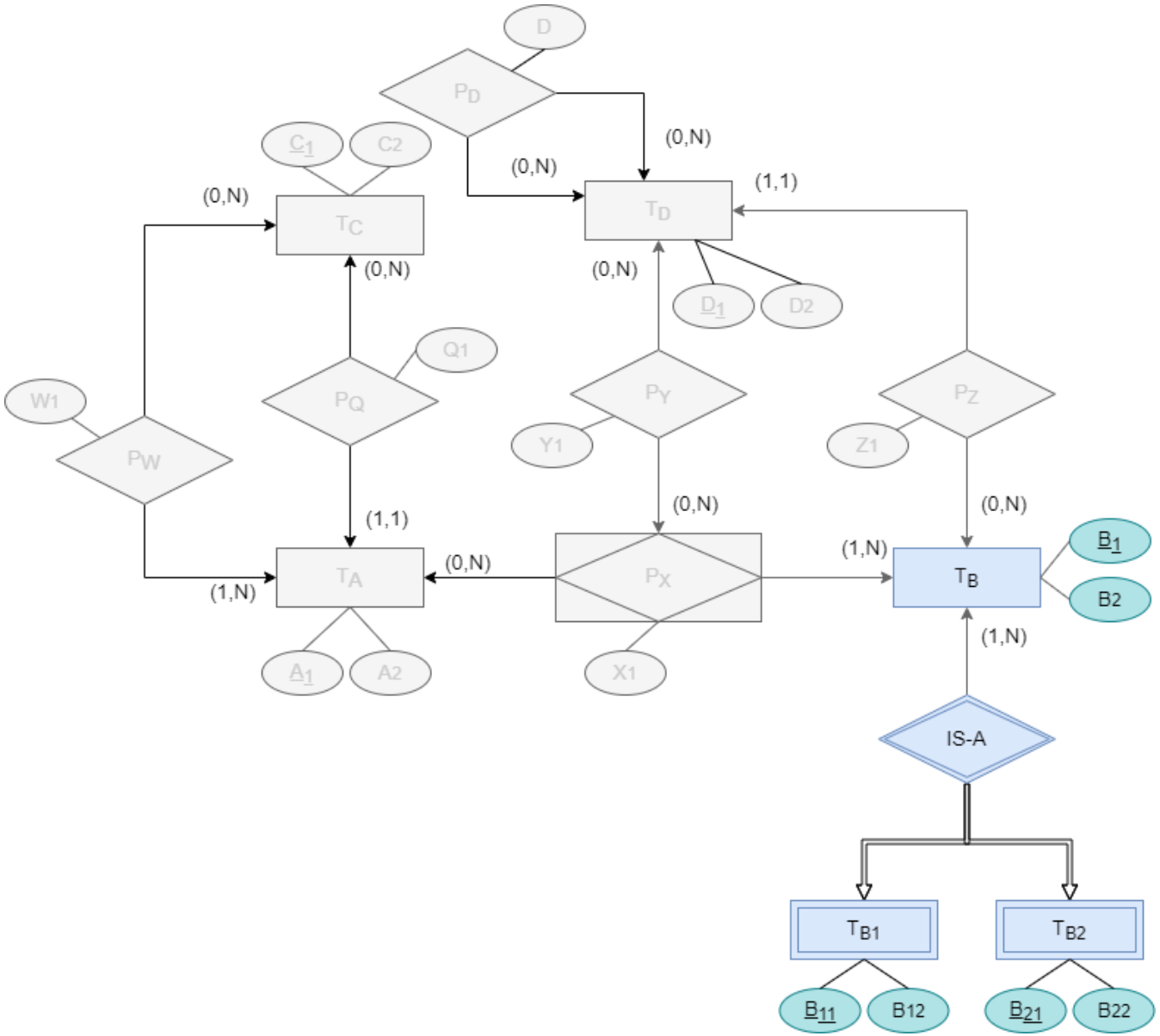

$$T_{B1}(\{B_1, B_{11}, B_{12}\}, \{B_1, B_{11}\})$$

$$T_{B1}[B_1] \subseteq T_B[B_1]$$

$$T_{B2}(\{B_1, B_{21}, B_{22}\}, \{B_1, B_{21}\})$$

$$T_{B2}[B_1] \subseteq T_B[B_1]$$

Ograničenje totalne IS-A hijerarhije:

$$T_B[B_1] \subseteq T_{B1}[B_1] \cup T_{B2}[B_1]$$

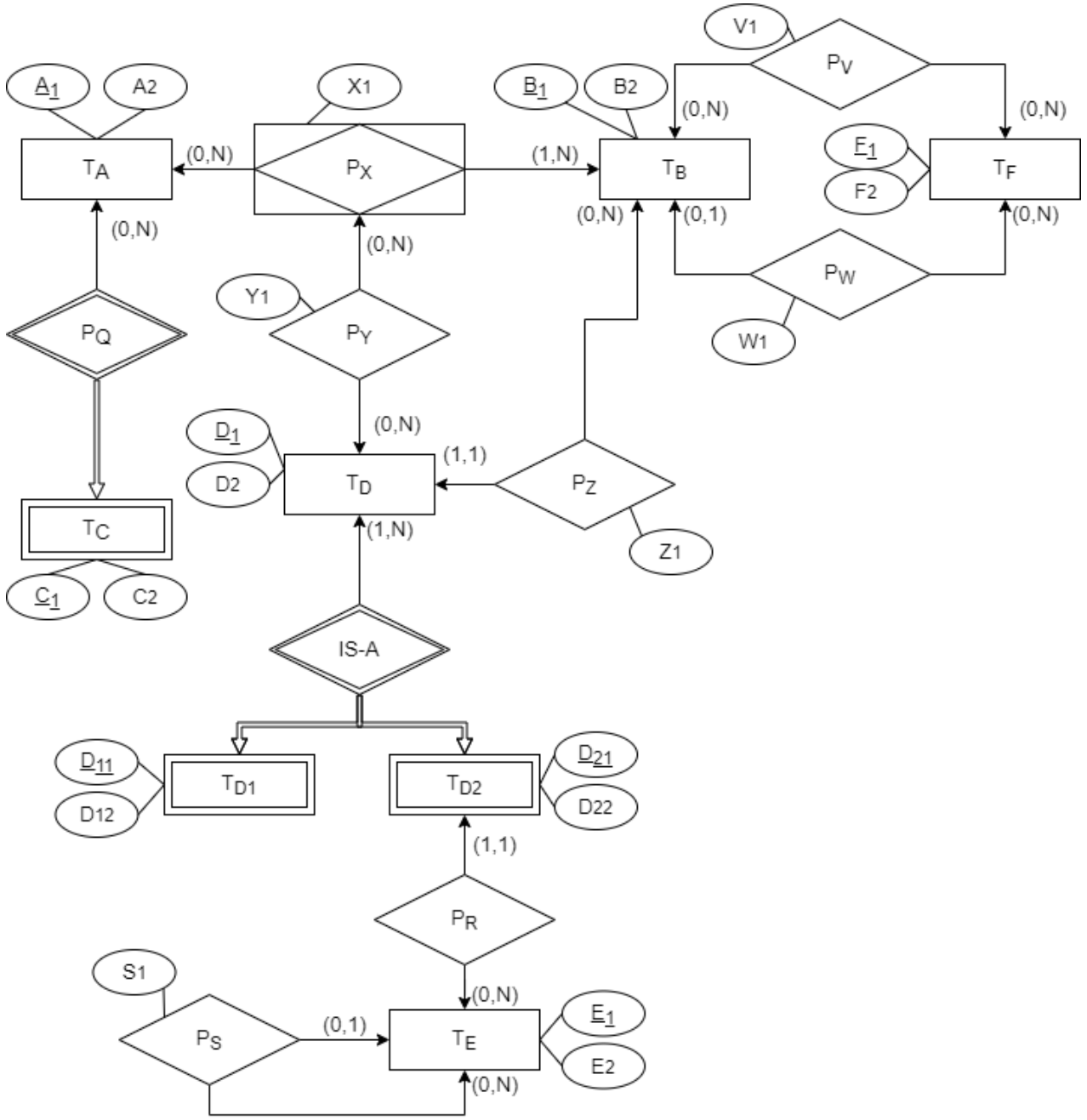
A1
A2
X1
B1
B2
V1
PV
(0,N)
(0,N)
TA
(0,N)
PX
(1,N)
TB
F1
F2
TF
(0,N)
(0,1)
(0,N)
(0,N)
(0,N)
PW
W1
Y1
PY
PQ
D1
D2
(0,N)
(1,1)
TD
PZ
TC
(1,N)
Z1
C1
C2
IS-A
D11
D12
TD1
TD2
D21
D22
(1,1)
PR
S1
(0,N)
PS
(0,1)
TE
E1
E2
(0,N)

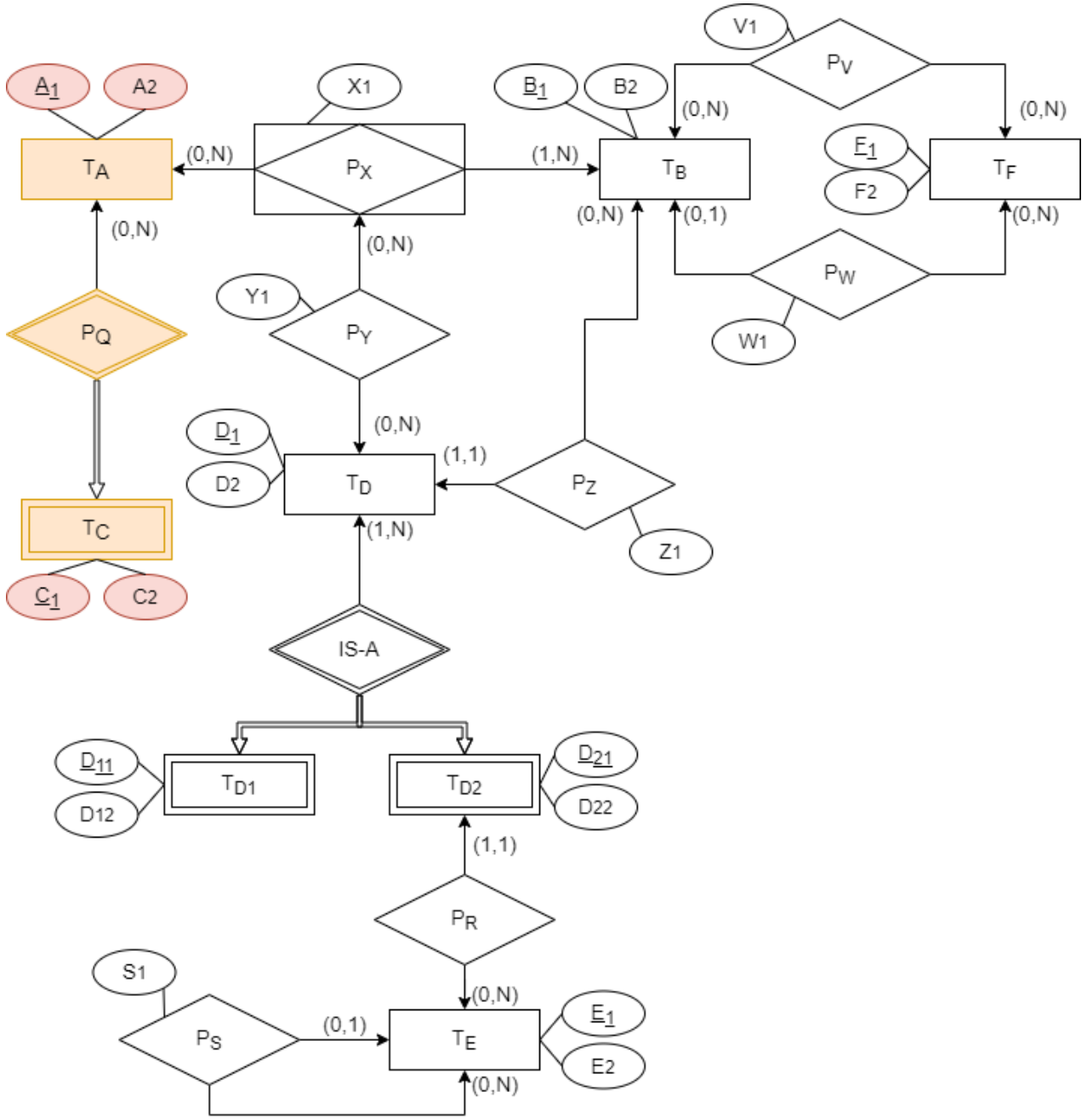

$$T_A(\{A_1, A_2\}, \{A_1\})$$

$$T_C(\{C_1, C_2, A_1\}, \{A_1 + C_1\})$$

$$T_C[A_1] \subseteq T_A[A_1]$$

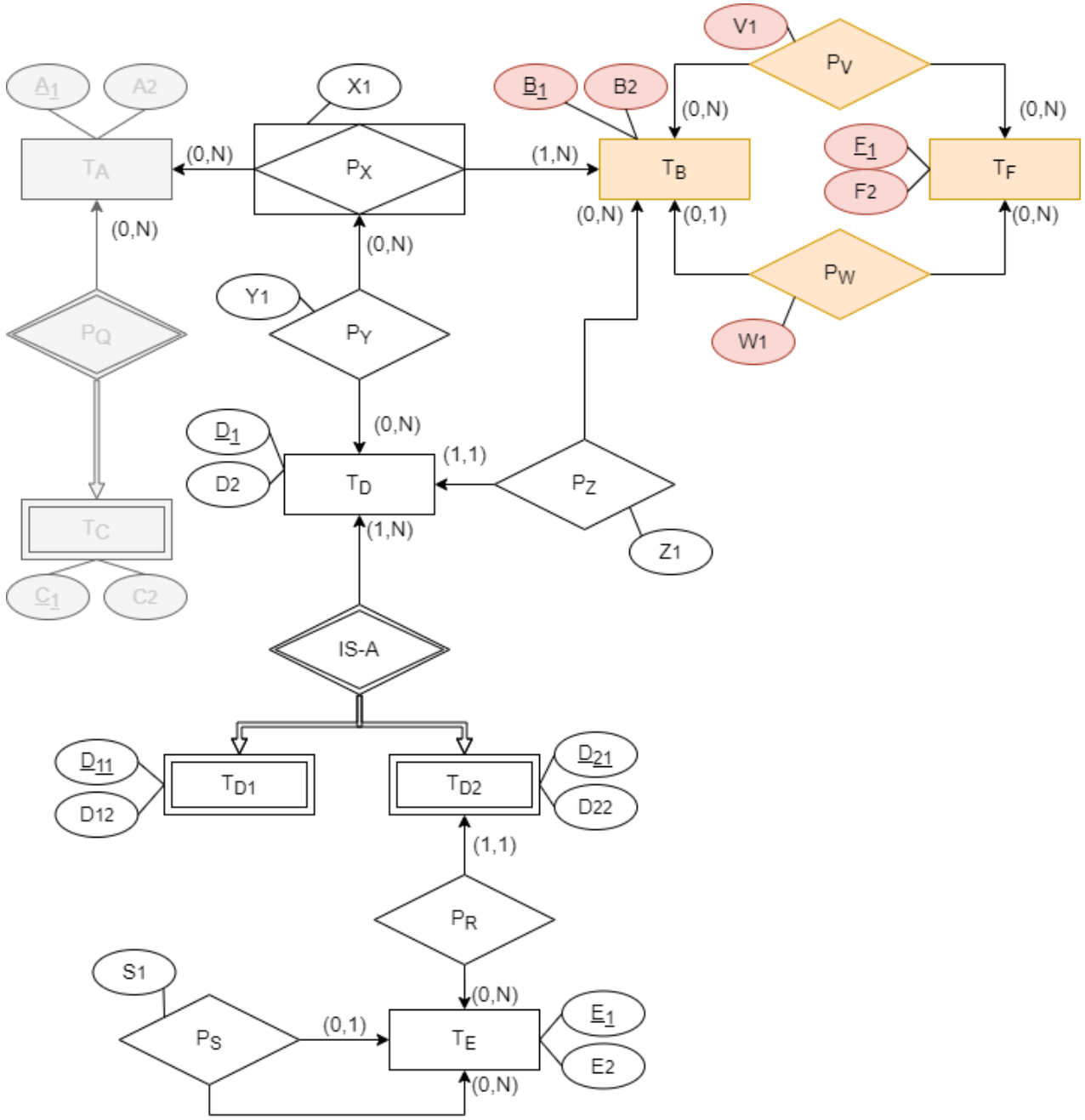

$$T_F(\{F_1, F_2\}, \{F_1\})$$

$$T_B(\{B_1, B_2, F_{11}, W_1\}, \{B_1\})$$

$$\mathrm{dom}(F_{11}) \subseteq \mathrm{dom}(F_1)$$

$$T_B[F_{11}] \subseteq T_F[F_1]$$

$$\mathrm{Null}(T_B, F_{11}) = \mathrm{T}$$

$$P_V(\{B_1, F_1, V_1\}, \{B_1 + F_1\})$$

$$P_V[F_1] \subseteq T_F[F_1]$$

$$P_V[B_1] \subseteq T_B[B_1]$$

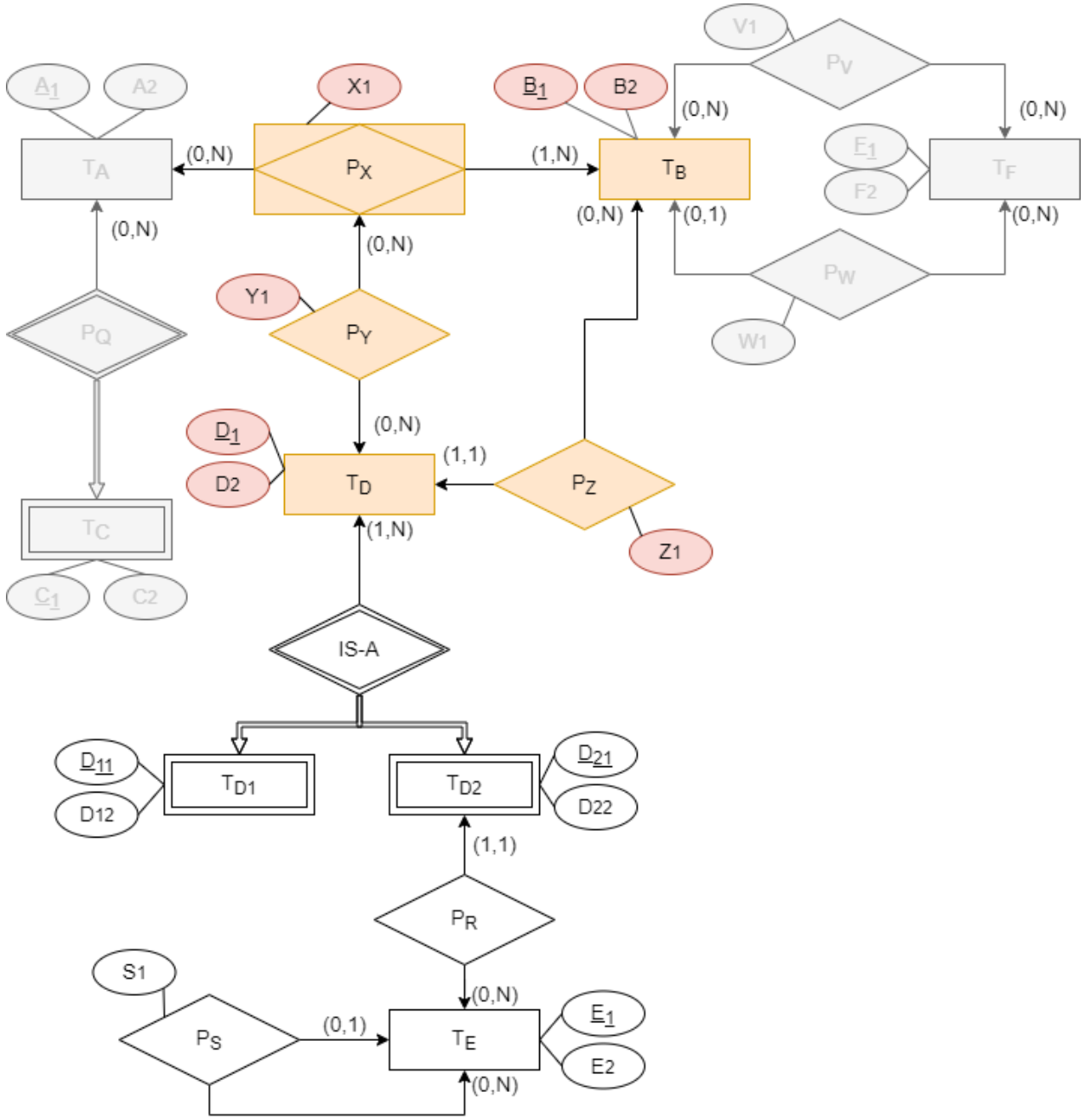

$$P_X(\{A_1, B_1, X_1\}, \{A_1 + B_1\})$$

$$P_X[A_1] \subseteq T_A[A_1]$$

$$P_X[B_1] \subseteq T_B[B_1]$$

$$T_B[B_1] \subseteq P_X[B_1]$$

$$T_D(\{D_1, D_2, B_1, Z_1\}, \{D_1\})$$

$$T_D[B_1] \subseteq T_B[B_1]$$

$$\mathrm{Null}(T_D, B_1) = \perp$$

$$P_Y(\{D_1, A_1, B_1, Y_1\}, \{A_1 + B_1 + D_1\})$$

$$P_Y[D_1] \subseteq T_D[D_1]$$

$$P_Y[A_1 + B_1] \subseteq P_X[A_1 + B_1]$$

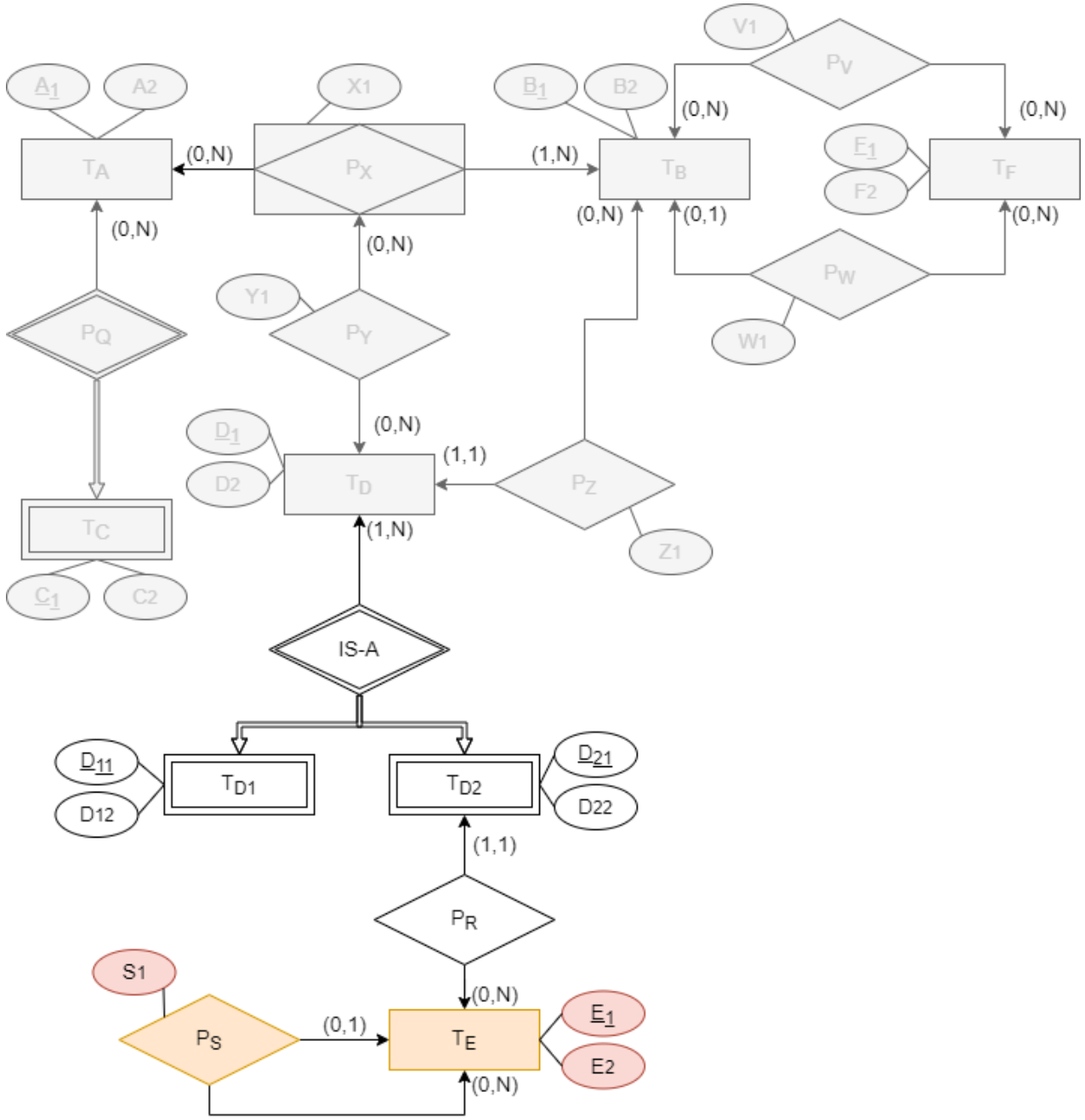

$$T_E(\{E_1, E_2, E_{11}, S_1\}, \{E_1\})$$

$$\mathrm{dom}(E_{11}) \subseteq \mathrm{dom}(E_1)$$

$$T_E[E_{11}] \subseteq T_E[E_1]$$

$$\mathrm{Null}(T_E, E_{11}) = T$$

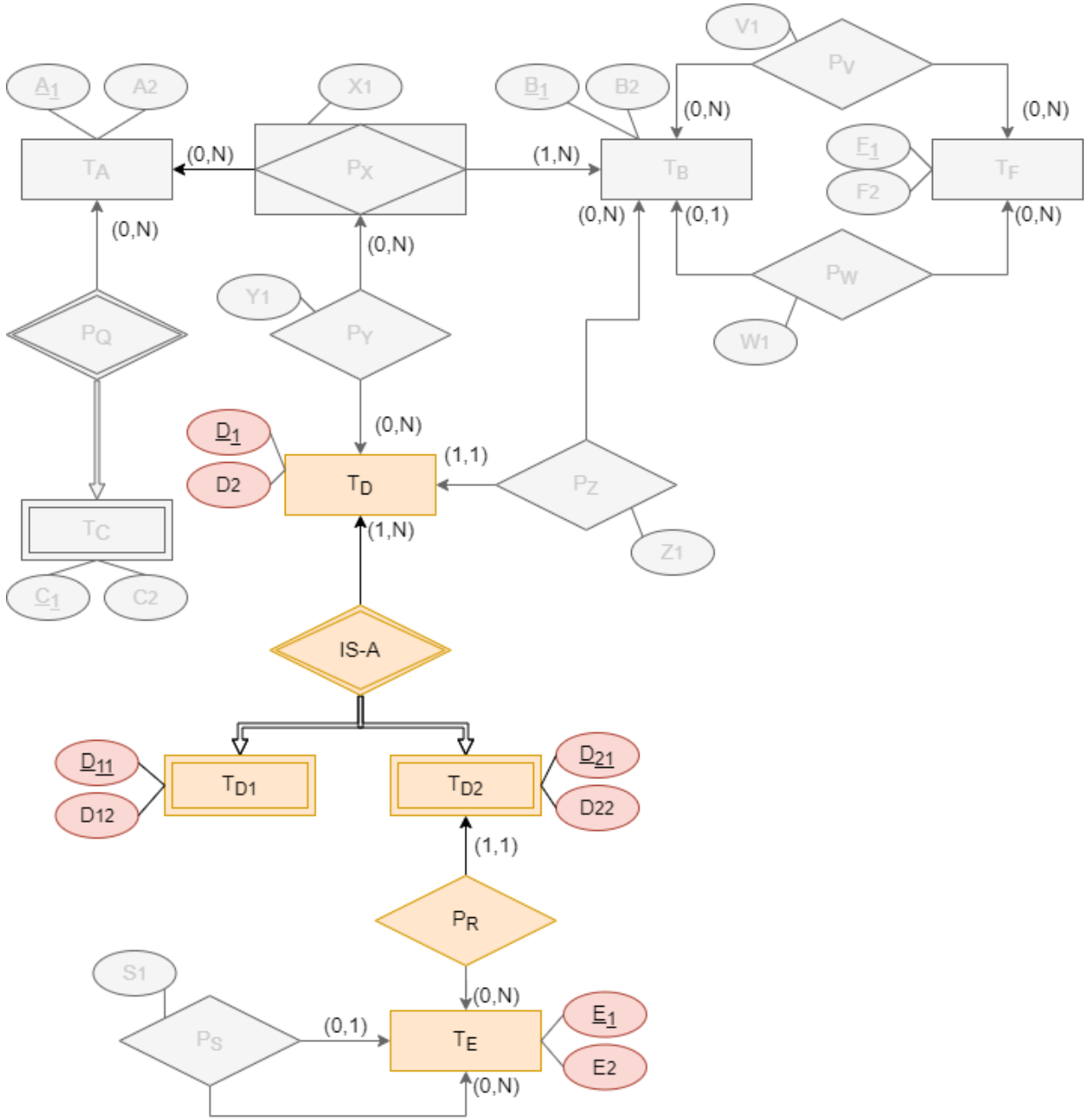

$$T_{D1}(\{D_{11}, D_{12}, D_1\}, \{D_1, D_{11}\})$$

$$T_{D1}[D_1] \subseteq T_D[D_1]$$

$$T_{D2}(\{D_{21}, D_{22}, D_1, E_1\}, \{D_1, D_{21}\})$$

$$T_{D2}[D_1] \subseteq T_D[D_1]$$

$$T_{D2}[E_1] \subseteq T_E[E_1]$$

$$Null(T_{D2}, E_1) = \perp$$

Ograničenje totalne IS-A hijerarhije:

$$T_D[D_1] \subseteq T_{D1}[D_1] \cup T_{D2}[D_1]$$

Prevođenje različitih vrsta IS-A hijerarhije

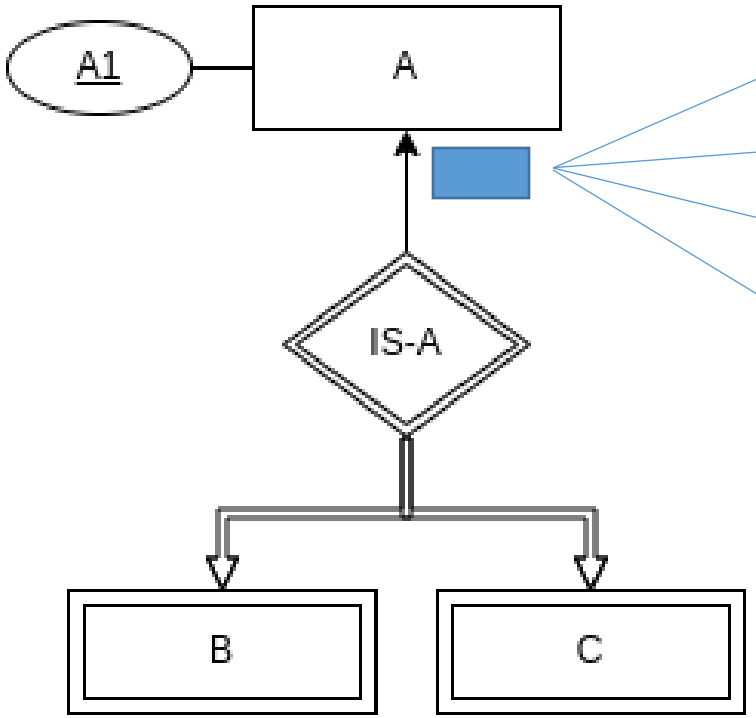

- (0, _) - parcijalna IS-A hijerarhija
  Ne uvodimo dodatno ograničenje
- (1, _) - totalna IS-A hijerarhija
  $A[A1] \subseteq B[A1] \cup C[A1]$
- (_, 1) - nepresečna IS-A hijerarhija
  $B[A1] \cap C[A1] = \emptyset$
- (_, N) - presečna IS-A hijerarhija
  Ne uvodimo dodatno ograničenje